SECTION GENERAL NOTES

1. SEE SHEET A0.10 AND A0.11 FOR ASSEMBLIES.
2. ALL FLOORS ARE TYPE **F10**, UNO.
3. ALL CEILINGS ARE C11, UNO.
4. WALL SECTIONS ARE REFRENCED FROM THE A2.20 PLAN SERIES
5. REFER TO ROOF PLANS FOR SLOPE DESIGN INTENT

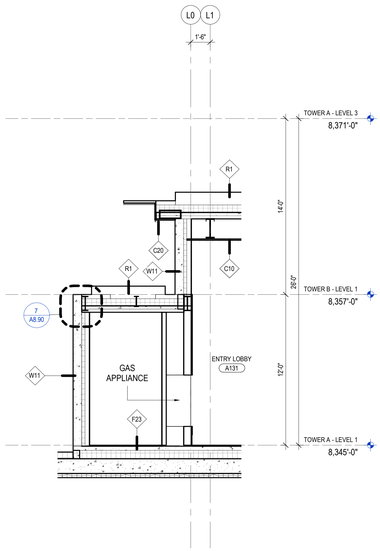

3 LOBBY - WALL SECTION C
SCALE: 1/4" = 1'-0"

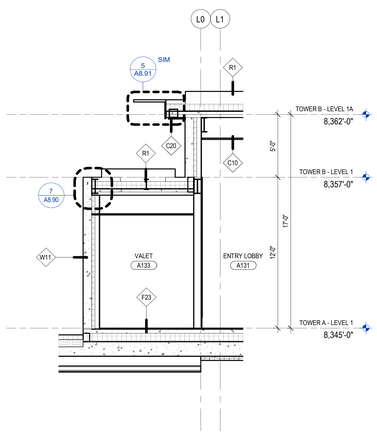

1 LOBBY - WALL SECTION A
SCALE: 1/4" = 1'-0"

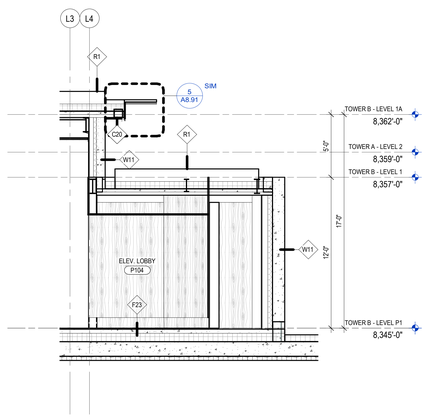

4 LOBBY - WALL SECTION D
SCALE: 1/4" = 1'-0"

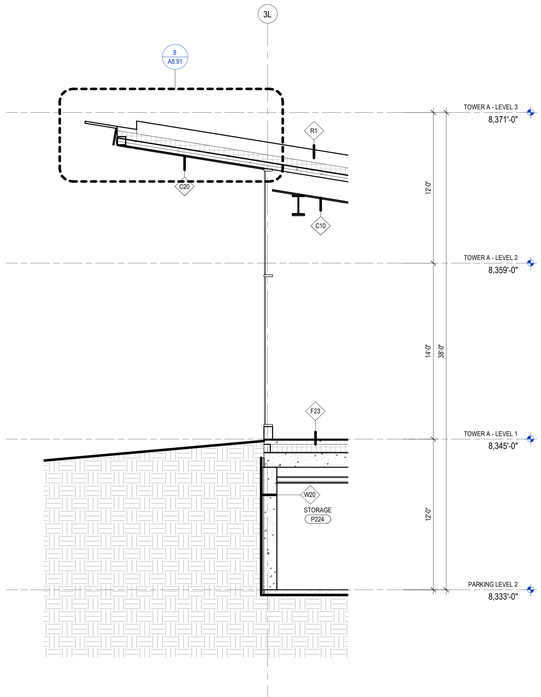

2 LOBBY - WALL SECTION B
SCALE: 1/4" = 1'-0"

STATE OF UTAH
THOMAS WALTER KUNDIG
7298177-0301
LICENSED ARCHITECT

Olson Kundig
159 South Jackson St, Suite 600
Seattle, Washington 98104 USA
+1 206.624.5670 olsonkundig.com

SOMMET BLANC
9500 MARSAC AVE
PARK CITY, UT 84060

ASPEN GROUP
Aspen Group USA, LLC
PO Box 980022
Park City, Utah 84098

Pool Consultant
Cloward H20
2696 N University Ave, Suite 290
Provo, UT 84604

Landscape Architect
EPG Design
6949 South High Tech Drive, Suite 100
Midvale, Utah 84047

Specifications Writer
Friday Group
88 Mainelli Road
Middlebury, VT

Code Consultant
Holmes
600 1st Avenue, Suite 200A
Seattle, WA 98104

Fire Protection Engineer
Jensen Hughes
One Research Drive, Suite 305C
Westborough, MA 01581

Vertical Transportation Consulatant
Lerch Bates
19515 North Creek Parkway, Suite 304
Bothell, WA 98011

Structural Engineer
Magnusson Klemencic Associates
1301 5th Ave, Suite 3200
Seattle, WA 98101

Lighting Designer
O-
1319 SE MLK Blvd, Suite 210
Portland, Oregon 97219

Building Envelope Consultant
RDH
2101 N 34th St
Seattle, WA 98103

Accessibility Consultant
Studio Pacifica
2144 Westlake Ave N, Suite F
Seattle, WA 98109

MEP Engineer
WSP USA
1001 Fourth Ave., Suite 3100
Seattle, WA 98154

principal architect TK, KM
project manager TM, JB, SL, MD
drawn by SK, SS, JR, OP, EA, JF, BD
checked by JB
job no. 20052
date 05/17/2024

revisions:

no.	date	by

IFC SET 2 OF 3
05/17/2024

WALL SECTIONS - TOWER AB - LOBBY

A4.2AB.1