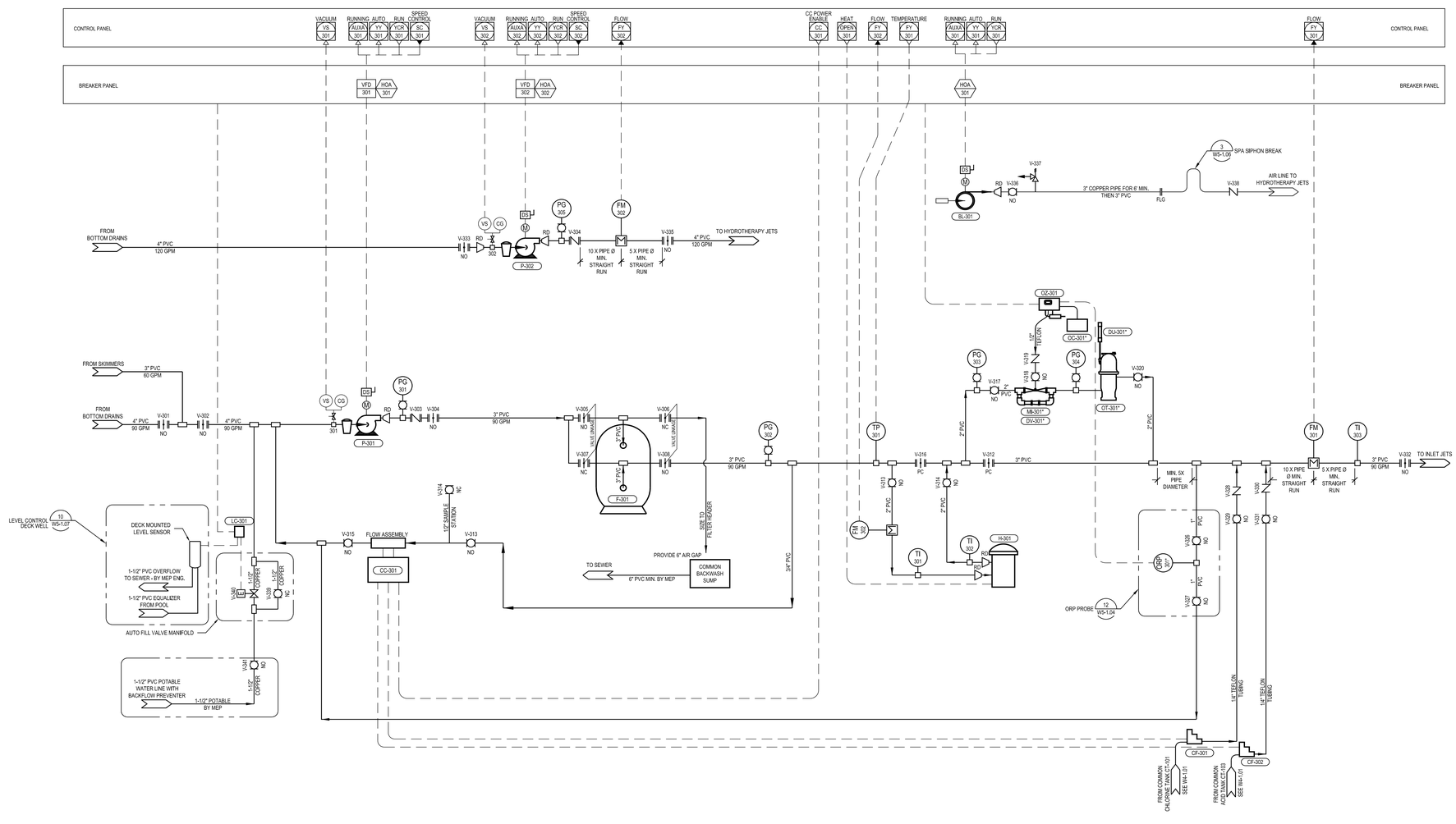

MECHANICAL EQUIPMENT SCHEDULE

ITEM TAG	DESCRIPTION	SPECIFICATION	KW	HP	RPM	VAC	PHASE	Hz
P-301	TREATMENT PUMP	PENTAIR WHISPERFLOXF, XFK-8, 90 GPM @ 60' TDH WITH STRAINER	1.5	2	VAR	460	3	60
P-302	FEATURE PUMP	PENTAIR WHISPERFLOXF, XFK-6, 120 GPM @ 35' TDH WITH STRAINER	1.1	1.5	VAR	460	3	60
F-301	SAND FILTER	TRITON, TR-140C, 7.07 SQ. FT. PER FILTER						
OZ-301	OZONE GENERATOR	MICRO PLASMA O3, MP10, 10 G/HR	0.2			208	1	60
	OXYGEN GENERATOR	AP-301* AIRSEP, TOPAZ, MODEL AS013-115, SS ENCLOSURE				120	1	60
	OZONE INJECTOR	MI-301* MAZZEI, #978, KYNAR, 1" MNPT, 1/2" SUCTION PORT, INCLUDE FITTING KIT						
	CONTACT TANK & DESTRUCT UNIT	OT-301*, DU-301*, MICRO PLASMA, DEGAS & DESTRUCT SYSTEM 970-0015, THERMOCATALYTIC						
	INJECTOR KIT	DV-301*, MICRO PLASMA, 2" SS CHECK VALVE, DV-0200						
	ORP PROBE	ORP-301*, MICRO-PLASMA OZONE, SXORP PLATINUM TIP ORP PROBE ASSEMBLY						
H-301	HEATER	PENTAIR, MAX-E-THERM, SR400NA, 400K BTU/HR						
CF-301	CHLORINE FEED PUMP	STENNER, 45M2, MAX FEED RATE 8 GPD	0.2			120	1	60
CF-302	pH FEED PUMP	STENNER, 45M1, MAX FEED RATE 2 GPD	0.2			120	1	60
CC-301	CHEMICAL CONTROLLER	BECS TECHNOLOGY, BECSYS3, INCLUDE INDUSTRIAL PROBES	1.1			120	1	60
TI-301 THRU TI-303	THERMOMETER	WEISS DVU35 DIGITAL TEMPERATURE GUAGE W/ THERMOWELL						
TP-301	TEMP. PROBE	WEISS DVUT35 DIGITAL TEMPERATURE GUAGE, 24VDC, 4-20mA OUTPUT, W/THERMOWELL						
FM-301 THRU FM-303	FLOW METER	SIGNET 2551, MAGMETER FLOW SENSOR W/ SIGNET 9900 TRANSMITTER						
PG-301 THRU PG-305	PRESSURE GUAGE	WIKA (TYPE PER INSTALLATION), LIQUID FILLED 4 INCH (100mm) DIA.,						
CG-301, CG-302	COMPOUND GUAGE	WIKA (TYPE PER INSTALLATION), LIQUID FILLED 2.5 INCH (63mm) DIA, 0-30 Hg/0-30 PSI RANGE						
VS-301, VS-302	VACUUM SWITCH	MERCOID VACUUM LIMIT SWITCH, ADJUSTABLE SET POINTS (2-3 IN Hg)						
LC-301	LEVEL CONTROLLER	AQUATICONTROL, (ELC-800) DECK WELL LEVEL SENSOR & CONTROLLER				120	1	60
BL-301	BLOWER	ROTRON, DR454R72M, 48 SCFM @ 56 IN H2O, W/ INTAKE MUFFLER	1.1	1.5		460	3	60

POOL GEOMETRY

SURFACE AREA	102	SQUARE FEET
VOLUME	2,289	GALLONS

TREATMENT INFORMATION

TURNOVER FLOW RATE	90	GPM
TURNOVER TIME	.43	HOURS
	26	MINUTES
MAXIMUM BATHER LOAD	4	PERSONS

EQUIPMENT TAG LEGEND

EQUIPMENT CALL OUT — EQ-100 — IDENTIFICATION NUMBER

WATER FEATURE LEGEND

WATER FEATURE	SERIES NUMBER
POOL	100
SPA 1	200
SPA 2	300

NOTES

1) AIR RELIEF VALVES MAY NEED TO BE ADDED IN HIGH POINTS OF PIPING BUT ARE NOT SHOWN ON SCHEMATIC DRAWINGS.

2) ALL VALVES LOCATED SEVEN FEET ABOVE THE FINISHED FLOOR REQUIRE CHAIN OPERATORS.

REGISTERED PROFESSIONAL ENGINEER # 353533 CORRY M. CLOWARD STATE OF UTAH 4/1/23

Reserved for permit stamp

Olson Kundig
159 South Jackson St, Suite 600
Seattle, Washington 98104 USA
+ 1.206.624.5670 olsonkundig.com

project
PROJECT NAME : SOMMET BLANC
PROJECT ADDRESS

White Summit Development, LLC
PO Box 980022
Park City, Utah 84098

Acoustic Consultant
BRC Acoustics
1932 1st Ave, Suite 620
Seattle, WA 98101

CLOWARD H2O WATER RESEARCH
2436 N. Lakewalk Ave. Ste. 290, Provo UT 84604, USA
Tel: +1.801.373.0123 • www.cloward-h2o.com

Landscape Architect
EPG Design
6949 South High Tech Drive, Suite 100
Midvale, Utah 84047

Specifications Writer
Friday Group
88 Mainelli Road
Middlebury, VT

Code Consultant
Holmes
600 1st Avenue, Suite 200A
Seattle, WA 98104

Fire Protection Engineer
Jensen Hughes
One Research Drive, Suite 305C
Westborough, MA 01581

Vertical Transportation Consultant
Lerch Bates
19515 North Creek Parkway, Suite 304
Bothell, WA 98011

Structural Engineer
Magnusson Klemencic Associates
1301 5th Ave, Suite 3200
Seattle, WA 98101

Lighting Designer
O-
1319 SE MLK Blvd, Suite 210
Portland, Oregon 97219

Building Envelope Consultant
RDH
2101 N 34th St
Seattle, WA 98103

Accessibility Consultant
Studio Pacifica
2144 Westlake Ave N, Suite F
Seattle, WA 98109

MEP Engineer
WSP USA
1001 Fourth Ave., Suite 3100
Seattle, WA 98154

principal architect CH2O
project manager CH2O
drawn by CH2O
checked by CH2O
job no. XXXXX
date 05/17/2024

revisions:

DRAWING STATUS

IFC SET 2 OF 3

05/17/2024

SPA 2 FILTRATION FLOW DIAGRAM

W4—1.03