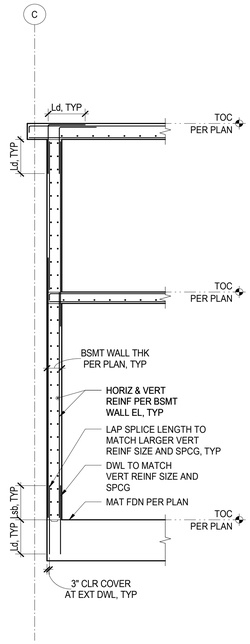

1 BASEMENT WALL SECTION
1/4" = 1'-0"

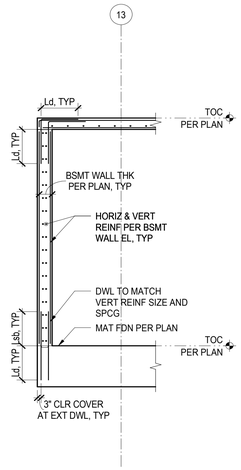

2 BASEMENT WALL SECTION
1/4" = 1'-0"

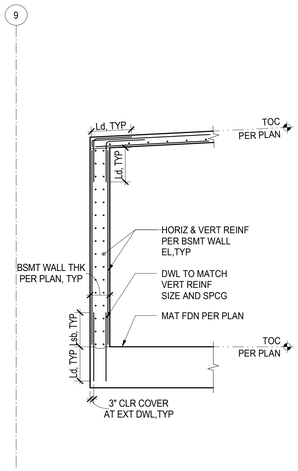

3 BASEMENT WALL SECTION
1/4" = 1'-0"

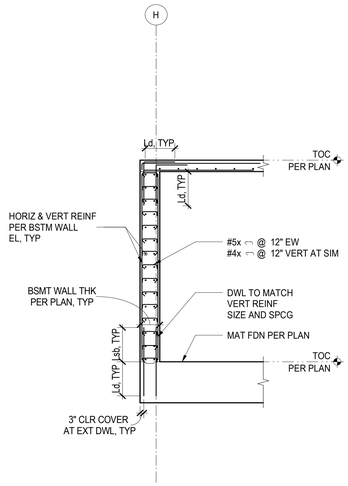

4 BASEMENT WALL SECTION
1/4" = 1'-0"

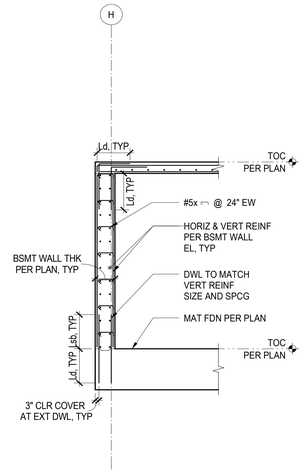

5 BASEMENT WALL SECTION
1/4" = 1'-0"

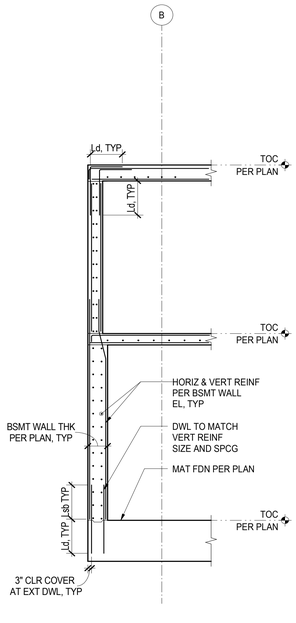

6 BASEMENT WALL SECTION
1/4" = 1'-0"

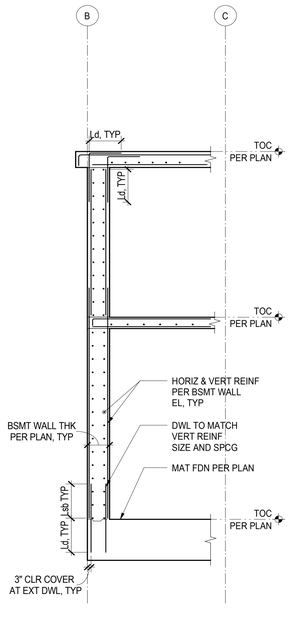

7 BASEMENT WALL SECTION
1/4" = 1'-0"

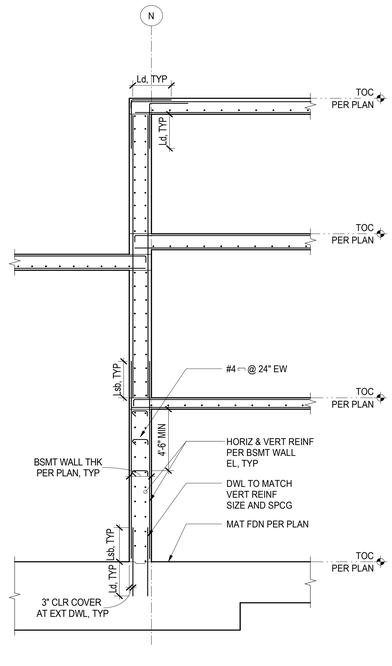

8 BASEMENT WALL SECTION
1/4" = 1'-0"

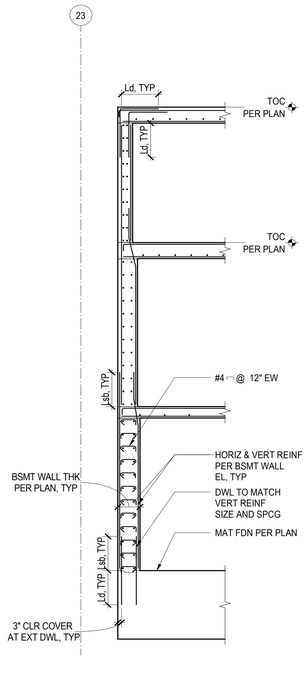

9 BASEMENT WALL SECTION
1/4" = 1'-0"

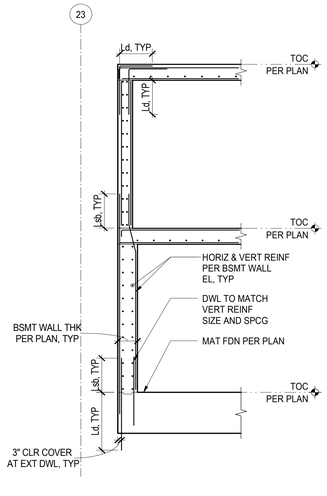

10 BASEMENT WALL SECTION
1/4" = 1'-0"

Reserved for permit stamp

Olson Kundig
159 South Jackson St, Suite 600
Seattle, Washington 98104-1069
+1 206 624 5670 olsonkundig.com

project:
SOMMET BLANC - ABC
DEER VALLEY, UTAH

MAGNUSSON KLEMENCIC ASSOCIATES
Structural + Civil Engineers
Seattle Chicago
www.mka.com
206 292 1200

principal architect
project manager
drawn by
checked by
job no. 20052
date 05/17/2024

revisions:

no.	date	by
	04/08/2024	IFC SET 1 OF 3
	11/18/2022	95% CD

IFC SET 2 OF 3

05/17/2024

TOWER A & B
BASEMENT WALL
SECTIONS

S3.35