SHEAR WALL VERTICAL REINFORCING SCHEDULE		
MARK	REINFORCING	REMARKS
V1	#6 @ 12"	EF
V2	#7 @ 12"	EF
V3	#8 @ 12"	EF
V4	#7 @ 6"	EF
V5	#9 @ 12"	EF

SHEAR WALL HORIZONTAL REINFORCING SCHEDULE		
MARK	REINFORCING	REMARKS
H1	#5 @ 12"	EF
H2	#6 @ 12"	EF
H3	#7 @ 12"	EF
H6	#5 @ 6"	(3) LAYERS
H7	#5 @ 6"	(4) LAYERS

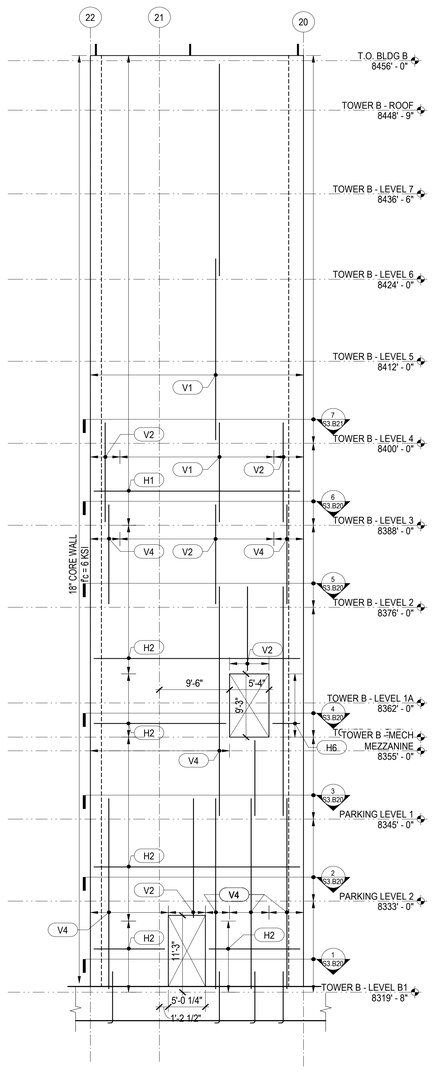

1 NORTH SHEAR WALL ELEVATION
1/8" = 1'-0"

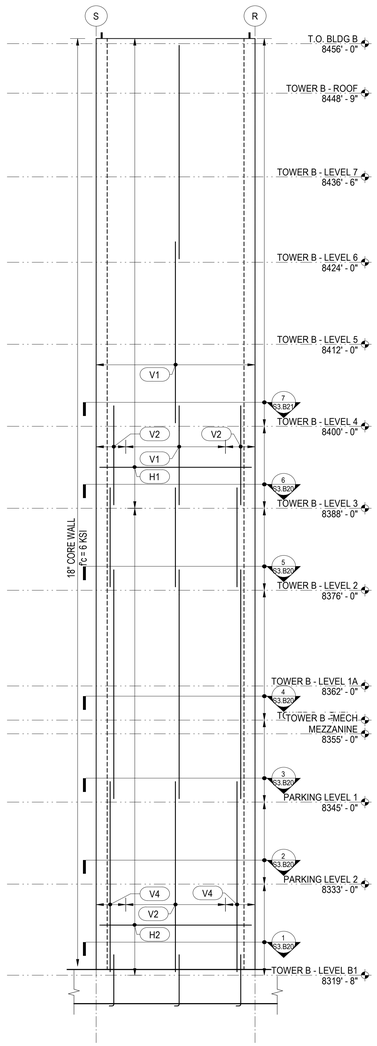

2 EAST SHEAR WALL ELEVATION
1/8" = 1'-0"

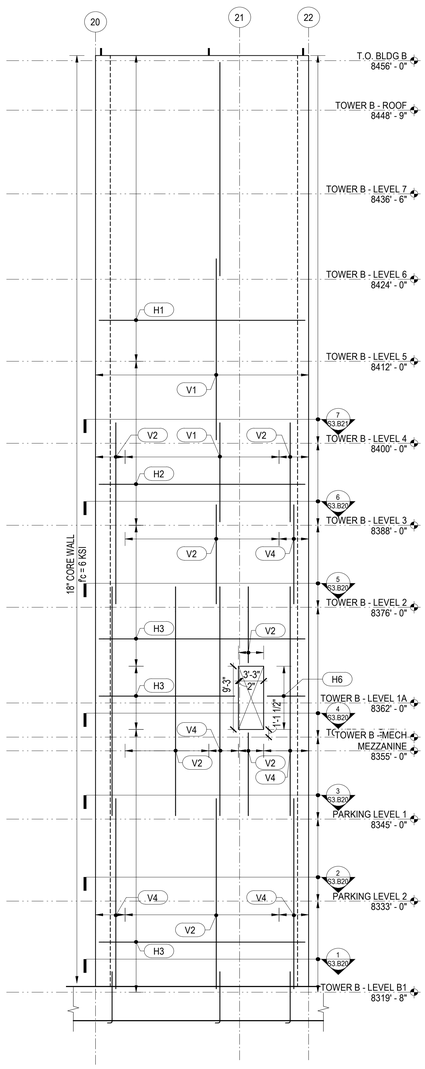

3 SOUTH SHEAR WALL ELEVATION
1/8" = 1'-0"

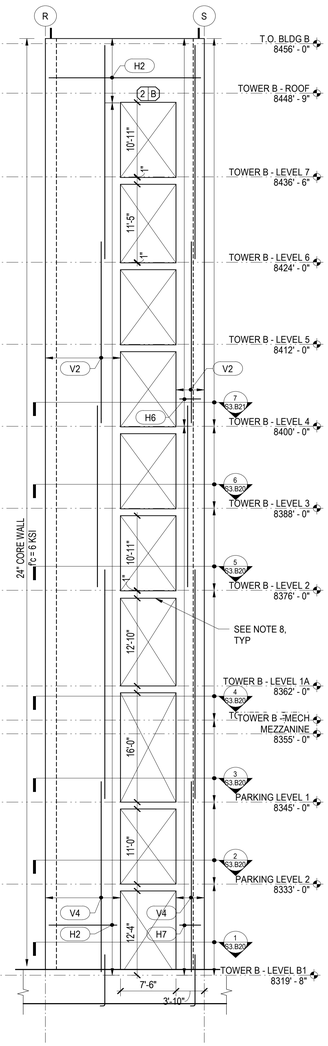

4 WEST SHEAR WALL ELEVATION
1/8" = 1'-0"

REFEERENCE DRAWINGS

S0.XX DRAWING INDEX, ABBREVIATIONS, LEGENDS, GENERAL NOTES
S1.XX LOAD DIAGRAMS
S2.XX PLANS
S3.XX ELEVATIONS
S4.XX TYPICAL DETAILS AND SCHEDULES
S5.XX CONCRETE SECTIONS AND DETAILS
S6.XX STEEL SECTIONS AND DETAILS

NOTES

1. CORE WALL OPENINGS REMAIN THE SAME SIZE AS THE DIMENSIONED OPENING BELOW, UNLESS NOTED OTHERWISE.
2. WALL OPENINGS AND SLEEVE PENETRATIONS NOT SPECIFICALLY INDICATED ON THE STRUCTURAL DRAWINGS SHALL BE APPROVED BY THE STRUCTURAL ENGINEER PRIOR TO CONSTRUCTION.
3. FOUNDATION DOWELS SHALL MATCH SIZE AND SPACING OF SHEAR WALL VERTICAL BARS ABOVE. EXTEND DOWELS TO BOTTOM OF FOUNDATION WITH 90 DEGREE HOOK.
4. VERTICAL REINFORCEMENT RETAINS THE SAME MARK AS FOR THE STORY BELOW, UNLESS NOTED OTHERWISE.
5. LAP VERTICAL REINFORCEMENT Lsb, UNLESS NOTED OTHERWISE. AT THE CONTRACTOR'S OPTION VERTICAL REINFORCEMENT MAY BE SPLICED AT INTERMEDIATE LEVELS, UNLESS NOTED OTHERWISE.
6. LAP HORIZONTAL REINFORCEMENT Lsbt, UNLESS NOTED OTHERWISE. WHERE LAPS NOT EXPLICITLY SHOWN IN SHEAR WALL SECTIONS, CONTRACTOR SHALL SUBMIT ANY ADDITIONAL LAP LOCATIONS FOR REVIEW BY THE ENGINEER.
7. SEE SHEAR WALL SECTIONS FOR ADDITIONAL REINFORCEMENT NOT SHOWN ON SHEAR WALL ELEVATIONS.
8. (1 A) INDICATES A CONCRETE COUPLING BEAM. SEE "TYPICAL CONCRETE COUPLING BEAM DETAILS AND SCHEDULES" FOR REINFORCEMENT. WHERE NO COUPLING BEAM IS CALLED OUT BETWEEN STACKED OPENINGS, SEE "TYP SLAB WITHOUT COUPLING BEAM AT STACKED WALL OPENINGS" DETAIL.
9. CONCRETE PLACED IN THE COUPLING BEAMS, INCLUDING THROUGHOUT THE SLAB DEPTH, SHALL MEET THE SAME SPECIFICATIONS AS FOR THE SHEAR WALLS. SEE GENERAL NOTES FOR CRITERIA.
10. SEE GENERAL NOTES FOR REINFORCEMENT THAT SHALL MEET SPECIAL DUCTILE QUALITY CRITERIA.

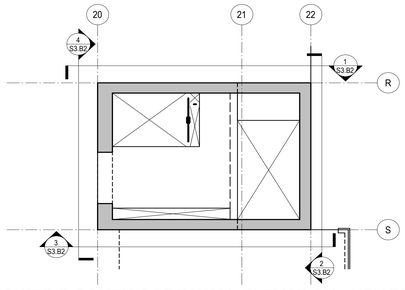

TOWER B SOUTH CORE WALL ELEVATION - KEY PLAN

DAVID C. FIELDS
REGISTERED
12385783-2203
PROFESSIONAL STRUCTURAL ENGINEER
STATE OF UTAH

Reserved for permit stamp

Olson Kundig
159 South Jackson St, Suite 600
Seattle, Washington 98104-1364
+1 206 624 5670 olsonkundig.com

project:
SOMMET BLANC - ABC
DEER VALLEY, UTAH

MAGNUSSON KLEMENCIC ASSOCIATES
Structural + Civil Engineers
Seattle Chicago
www.mka.com
206 292 1200

principal architect
project manager
drawn by
checked by
job no. 20052
date 05/17/2024

revisions:

no.	date	by
	04/08/2024	IFC SET 1 OF 3
	11/18/2022	95% CD

IFC SET 2 OF 3

05/17/2024

TOWER B SOUTH CORE WALL ELEVATIONS

S3.B2