EMBED TABLE 1: UNCONFINED CONDITION / GRADE 60					
BAR SIZE	EMBED LENGTH (IN)				
	NORMAL WEIGHT CONCRETE, f'c (PSI)				
	6,000	7,000	8,000	9,000	≥ 10,000
#5	19	18	17	16	15
#6	23	21	20	19	18
#7	37	34	32	30	28
#8	48	44	41	39	37
#9	61	56	53	50	47
#10	77	71	66	63	59
#11	94	87	82	77	73

1 EMBED TABLE 1

EMBED TABLE 2: CONFINED CONDITION / GRADE 60					
BAR SIZE	EMBED LENGTH (IN)				
	NORMAL WEIGHT CONCRETE, f'c (PSI)				
	6,000	7,000	8,000	9,000	≥ 10,000
#5	19	18	17	16	15
#6	23	21	20	19	18
#7	34	31	29	27	26
#8	42	39	37	35	33
#9	54	50	47	44	42
#10	68	63	59	56	53
#11	84	77	72	68	65

2 EMBED TABLE 2

NOTES:

1. CONCRETE STRENGTH OF ALL COUPLING BEAMS SHALL BE THE SAME AS THAT OF ADJACENT WALLS AT THAT LEVEL.
2. IF EMBED LENGTH OF BAR "a" CANNOT BE ACHIEVED DUE TO EDGE OF CORE WALL, PROVIDE 1.25*Ldt LENGTH BEYOND EDGE OF OPENING AND USE A HEADED BAR.
3. EMBED = LENGTH FROM "EMBED TABLE 1" OR "EMBED TABLE 2" AS SPECIFIED IN THE "COUPLING BEAM LONGITUDINAL REINFORCEMENT SCHEDULE."

3 GENERAL NOTES FOR COUPLING BEAMS

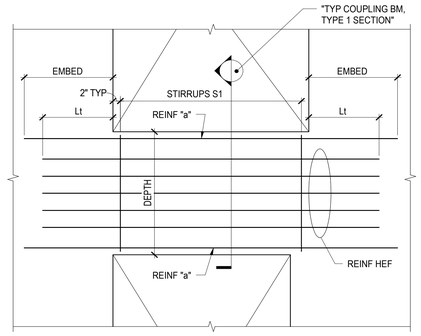

4 TYPICAL COUPLING BEAM, TYPE 1

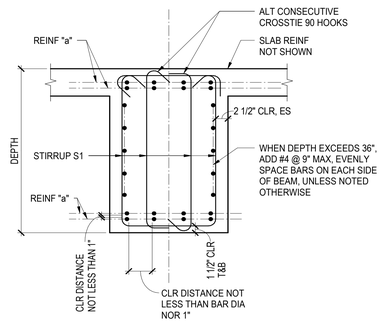

5 TYPICAL COUPLING BEAM,TYPE 1 SECTION

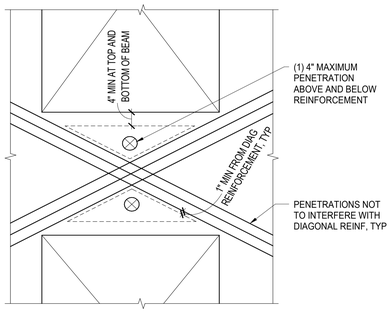

NOTES:

1. REFERENCE TYPICAL COUPLING BEAM TYPE 2 AND 3 FOR REINFORCEMENT LAYOUT

7 TYPICAL COUPLING BEAM PENETRATIONS, TYPE 2 & 3

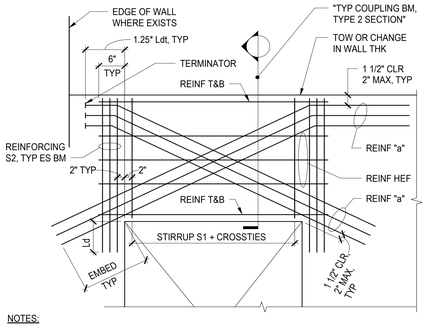

NOTES:

1. SEE SECTION FOR REINFORCEMENT NOT SHOWN.

8 TYPICAL COUPLING BEAM, TYPE 3

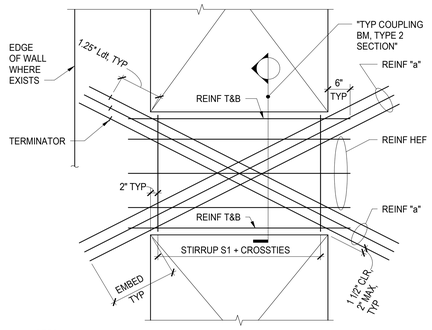

NOTES:

1. SEE SECTION FOR REINFORCEMENT NOT SHOWN.

9 TYPICAL COUPLING BEAM, TYPE 2

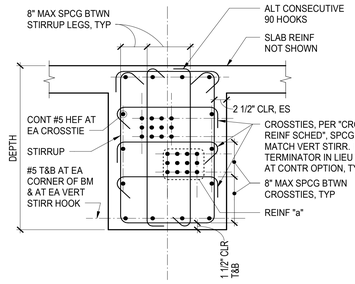

10 TYPICAL COUPLING BEAM, TYPE 2 SECTION

CROSSTIE REINFORCEMENT SCHEDULE		
MAX BEAM DEPTH (IN)	CROSSTIES	
	f'c=6 KSI	f'c=8 KSI
26"	(3) #5	(3) #5
100"	(12) #5	(12) #5
110"	(13) #5	(13) #5
120"	(18) #5	(15) #5
1		

COUPLING BEAM LONGITUDINAL REINFORCEMENT SCHEDULE						
MARK	TYPE	CONFIGURATION DIM (HxW) (IN)	REINF "a"	REINFORCEMENT S2	EMBED TABLE	REMARKS
1	1		(3) #8		TABLE 1	
2	3	4x6	(6) #9 [32]	(6) #5 [4]	TABLE 1	
3	3	4x6	(6) #8 [32]	(5) #5 [3]	TABLE 1	

COUPLING BEAM VERTICAL REINFORCEMENT SCHEDULE		
MARK	STIRRUPS S1	REMARKS
A	#5 @ 4" [3]	
B	#5 @ 4" [4]	

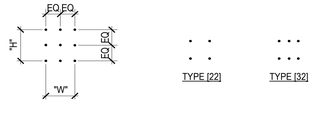

REINFORCEMENT "a" CONFIGURATION TYPES

NOTES:

1. DEPTH OF COUPLING BEAMS PER "SHEAR WALL ELEVATIONS." COUPLING BEAM WIDTH MATCHES ADJACENT SHEAR WALLS.
2. ALTERNATE CONSECUTIVE CROSSTIES END FOR END.
3. LONGITUDINAL REINFORCEMENT SHALL BE SPECIAL DUCTILE QUALITY. SEE "GENERAL NOTES" FOR CRITERIA.
4. REINFORCEMENT CALLOUT NOMENCLATURE IS AS FOLLOWS:

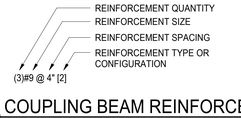

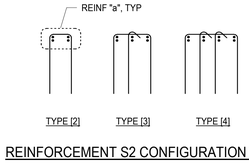

REINFORCEMENT S2 CONFIGURATION TYPES

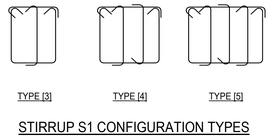

STIRRUP S1 CONFIGURATION TYPES

18 COUPLING BEAM REINFORCEMENT SCHEDULE

PROFESSIONAL STRUCTURAL ENGINEER No. 12385783-2203 DAVID CHARLES FIELDS STATE OF UTAH
04/06/24
Reserved for permit stamp

Olson Kundig
159 South Jackson St, Suite 600
Seattle, Washington 98104-1464
+1 206 624 5670 olsonkundig.com

project:
SOMMET BLANC - ABC
DEER VALLEY, UTAH

MAGNUSSON KLEMENCIC ASSOCIATES
Structural + Civil Engineers
Seattle Chicago
www.mka.com
206 292 1200

principal architect
project manager
drawn by
checked by
job no. 20052
date 04/08/2024

revisions:

no.	date	by
2	04/08/2024	IFC SET 1 OF 3
1	11/18/2022	95% CD

ISSUED FOR CONSTRUCTION SET 1 OF 3
04/08/2024

TYPICAL COUPLING BEAM DETAILS AND SCHEDULES

S4.09